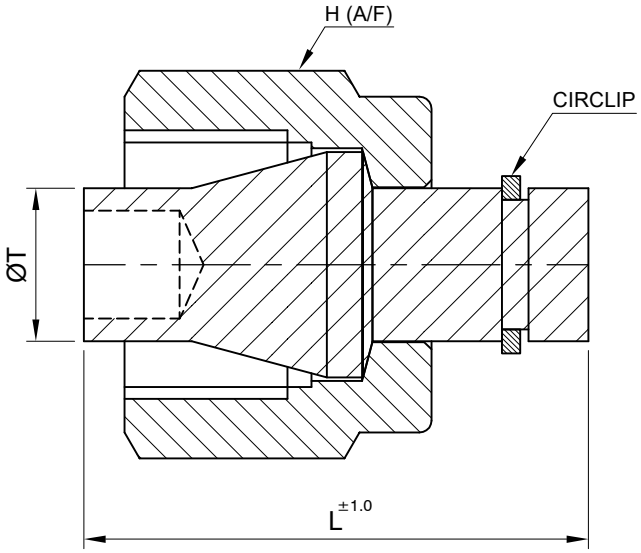

SR NO	PART NO	ØT	L	H (A/F)
1	6MTP-S6	6mm	21.0	14.0

havi
Fittings & Valves
info@havi.in www.havi.in
A-201, PRIME TRADE CENTER
SATIVALI ROAD, VASAI (E),
PALGHAR - 401208, MAHARASHTRA, INDIA

PART NAME : Tube Plug

DWG NO : - 6MTP-S6

MATERIAL : - AS PER BOM

CUSTOMER NAME:-

PROJECT NAME & NO:

ENQ NO:- EN2223/00927

SO NO: -

SHEET NO: 01 OF 01

REV NO: 00

SCALE: NTS

	SIGN	DATE
DRAWN BY	SB	11.11.2022
CHECKED BY	RW	11.11.2022
APPROVED BY	SM	11.11.2022

REV NO	DESCRIPTION	SIGN	DATE

* All dimensions are in mm. Dimensions for reference only and are subject to change without notice
* This document is the property of Havi Engineering India Pvt. Ltd. No exploitation or release of any text contained herein or relating to this document is permitted in any form without the written consent of HAVI.

PATH: -Z:\2022-2023\EXPORT\EN22230092\7\GAD