SR NO	QTY
22	03

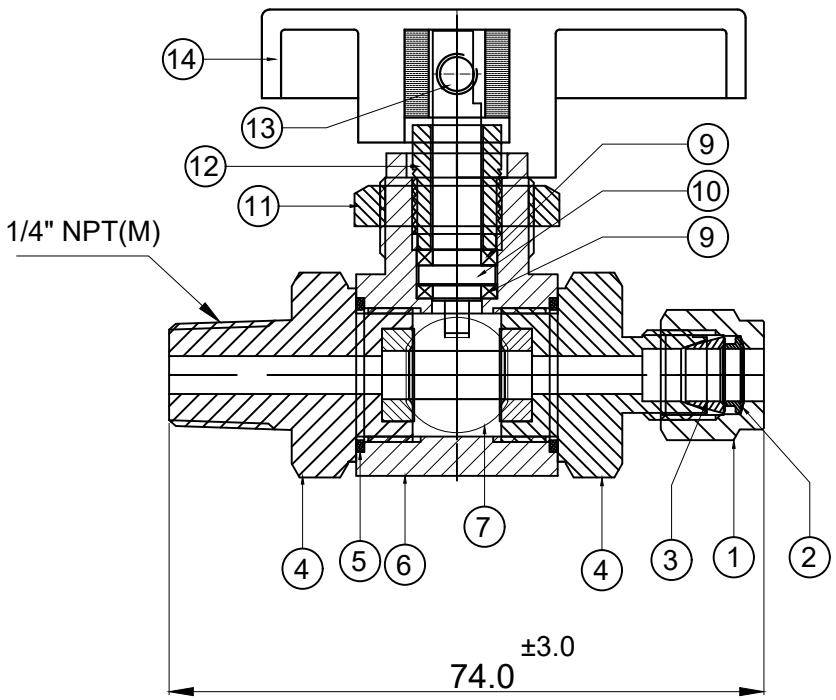

Sr No	PART	Material	Qty
1	Nut	SS 316	1
2	Back Ferrule	SS 316	1
3	Front Ferrule	SS 316	1
4	Side Connector	ASTM A 479 Gr. SS 316	2
5	Connector Packing	PTFE	2
6	Body	ASTM A 479 Gr. SS 316	1
7	Ball	ASTM A 479 Gr. SS 316	1
8	Seat	PEEK	2
9	Steam Seal	PTFE	2
10	Spindle	ASTM A 479 Gr. SS 316	1
11	Check Nut	SS 316	1
12	Pusher	ASTM A 479 Gr. SS 316	1
13	Grub Screw	SS 316	2
14	Handle	PVC	1

1/4" Pannel Mounted MBV
Max Pressure Rating: 6000 psig @ 100° F

End Connection: 1/4" ODT Connection with Ferrule

Testing : As per API 598
Body Test Press (Hydro): 9000 psig
Seat Test Press (Hydro): 6600 psig
Seat Test Press (Pneu): 90 psig

PART NAME :Assly for Medium Pressure Panel Mounted Ball Valve Size:-1/4" NPT(M) X 1/4"ODT

DWG NO :MBV-4M-4T-S6

MATERIAL : SS 316

CUSTOMER NAME:-

PMC:-

END USER NAME:

PO NO:

SO NO:

SHEET NO: 01 OF 01

REV NO: 01

SCALE: NTS

	SIGN	DATE
DRAWN BY	MBC	09-05-2023
CHECKED BY	MT	09-05-2023
APPROVED BY	SRD	09-05-2023

REV NO	DESCRIPTION	SIGN	DATE

havi Fittings & Valves

www.havi.in
info@havi.in

* All dimensions are in mm. Dimensions for reference only and are subject to change without notice
* This document is the property of Havi Engineering India Pvt. Ltd. No exploitation or release of any text contained herein or relating to this document is permitted in any form without the written consent of HAVI.

PATH: -J:\2023-2024\EXPORT\EN232400023\EN232400023\R0

J I H G F E D C B A

16 15 14 13 12 11 10 9 8 7 6 5 4 3 2 1